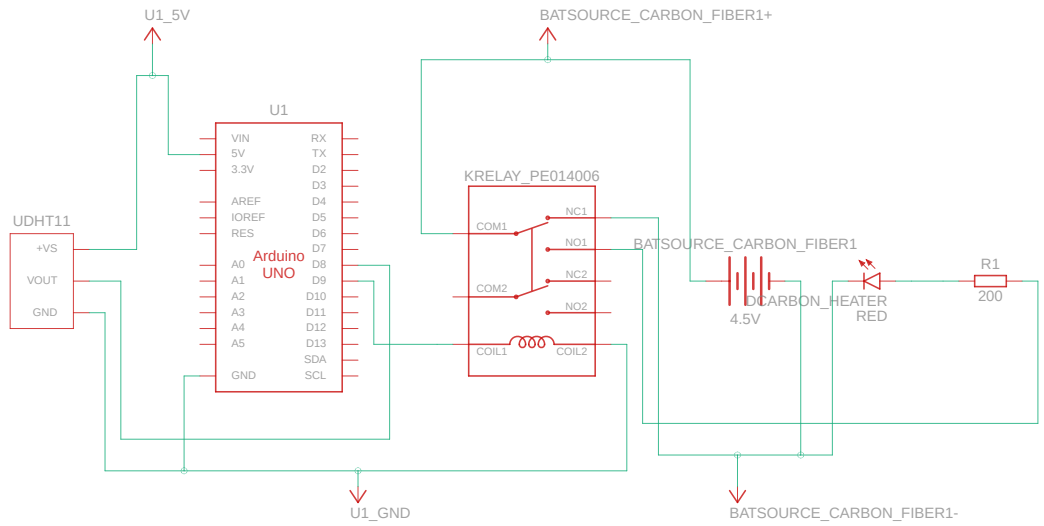

Made with Tinkercad®

Title: SIC_Project1_elecircuit	
Date: 9. 1. 2023, 01:46:04	Sheet: 1/1